项目批准号	32301966
申请代码	C1312
归口管理部门	
依托单位代码	71210008A1008-1910

323019661001782

国家自然科学基金

资助项目计划书

（包干制项目）

资助类别：青年科学基金项目

亚类说明：

附注说明：

项目名称：旱作农田有机肥无机肥配施下土壤温室气体排放的微生物源汇作用机制

资助经费：30万元　　执行年限：2024.01-2026.12

负 责 人：王威雁

通讯地址：陕西省杨凌示范区邰城路3号 西北农林科技大学

邮政编码：712100　　电　　话：029-87082085

电子邮件：wweiyan@nwsuaf.edu.cn

依托单位：西北农林科技大学

联 系 人：李晶　　电　　话：029-87080002

填表日期：2023年08月25日

国家自然科学基金委员会制

Version：1.001.782

编号：2022YFD2300803-8

国家重点研发计划
子课题任务书

子 课 题 名 称：强筋小麦规模机械化丰产优质生产技术体系集成与示范

子课题承担单位：西北农林科技大学 （公章）

子课题负责人：王威雁

所 属 课 题：黄淮海优质小麦—玉米规模机械化周年丰产增效生产技术体系集成与示范

课题牵头单位：河南省农业科学院小麦研究所 （公章）

执行期限：2022 年 11 月至 2025 年 12 月

二〇二三年一月

项目编号： 2023-ZDLNY-03

管理类型： 项目类

项目类别： 重点产业创新链（群）-农业领域

21227430804 2

陕西省重点研发计划

项目合同（任务）书

项目名称： 旱地小麦丰产增效绿色栽培技术集成与示范

承担单位： 西北农林科技大学 （盖章）

项目负责人： 王威雁 电子邮箱： wweiyan@nwsuaf.edu.cn

手机号码： 15929726452 联系电话： 029-87082085

推荐部门： 杨凌示范区科技创新和转化推广局

起止年限： 2022年10月01日 至 2025年12月31日

备注：

陕西省科学技术厅 制

课题编号	A314021402-202216

黄土高原土壤侵蚀与旱地农业
国家重点实验室基金课题合同书

课题名称：垄沟集雨对夏玉米根际功能微生物和产量的影响及互作机制

课题负责人：王威雁

承担单位：西北农林科技大学农学院
（加盖公章）

参加单位：

起止日期：2022 年 01 月 01 日 至 2023 年 12 月 31 日

联系电话：15929726452

Email：wweiyan@nwsuaf.edu.cn

黄土高原土壤侵蚀与旱地农业国家重点实验室

二零二一年十二月

黄土高原特色作物优质高效生产省部共建协同创新中心

开放课题计划任务书

课题编号：SBGJXTZXKF-08

课题名称：保护性耕作对农田土壤有机碳-氮稳定性的影响及其机制

所属分中心：特色作物提质增效栽培理论与技术创新

课题负责人： 王威雁

承担单位：西北农林科技大学农学院（盖章）

执行年限： 2021 年 09 月至 2024 年 08 月

填报日期：2021 年 9 月 11 日

黄土高原特色作物优质高效生产省部共建协同创新中心

二0二一年八月

frontiers | Frontiers in Microbiology

TYPE Original Research
PUBLISHED 20 July 2023
DOI 10.3389/fmicb.2023.1238708

OPEN ACCESS

EDITED BY
Zhigang Qiu,
Tianjin Institute of Environmental and Operational Medicine, China

REVIEWED BY
Zheng-Rong Kan,
Nanjing Agricultural University, China
Wensheng Fang,
Chinese Academy of Agricultural Sciences (CAAS), China
Yilai Lou,
Chinese Academy of Agricultural Sciences, China

*CORRESPONDENCE
Weiyan Wang
✉ wweiyan@nwsuaf.edu.cn
Xiaoxia Wen
✉ wenxiaoxia6811@163.com;
✉ wenxx66@nwsuaf.edu.cn

RECEIVED 12 June 2023
ACCEPTED 05 July 2023
PUBLISHED 20 July 2023

CITATION
Wang W, Shen P, Lu Z, Mo F, Liao Y and Wen X (2023) Metagenomics reveals the abundance and accumulation trend of antibiotic resistance gene profile under long-term no tillage in a rainfed agroecosystem. *Front. Microbiol.* 14:1238708.
doi: 10.3389/fmicb.2023.1238708

Metagenomics reveals the abundance and accumulation trend of antibiotic resistance gene profile under long-term no tillage in a rainfed agroecosystem

Weiyan Wang[1,2,3]*, Pengfei Shen[1], Zhiqiang Lu[1], Fei Mo[1], Yuncheng Liao[1] and Xiaoxia Wen[1,2]*

[1]College of Agronomy, Northwest A&F University, Yangling, Shaanxi, China, [2]Key Laboratory of Low-carbon Green Agriculture in Northwestern China, Ministry of Agriculture and Rural Affairs, Yangling, Shaanxi, China, [3]Key Laboratory of Crop Physi-ecology and Tillage Science in Northwestern Loess Plateau, Ministry of Agriculture, Northwest A&F University, Yangling, Shaanxi, China

Widespread soil resistance can seriously endanger sustainable food production and soil health. Conservation tillage is a promising practice for improving soil structure and health. However, the impact of long-term no-tillage on the presence of antibiotic resistance genes in agricultural soils remains unexplored. Based on the long-term (>11 yr) tillage experimental fields that include both conservation tillage practices [no tillage (ZT)] and conventional tillage practices [plough tillage (PT)], we investigated the accumulation trend of antibiotic resistance genes (ARGs) in farmland soils under long-term no-tillage conditions. We aimed to provide a scientific basis for formulating agricultural production strategies to promote ecological environment safety and human health. In comparison to PT, ZT led to a considerable reduction in the relative abundance of both antibiotic resistance genes and antibiotic target gene families in the soil. Furthermore, the abundance of all ARGs were considerably lower in the ZT soil. The classification of drug resistance showed that ZT substantially decreased the relative abundance of Ethambutol (59.97%), β-lactams (44.87%), Fosfomycin (35.82%), Sulfonamides (34.64%), Polymyxins (33.67%), MLSB (32.78%), Chloramphenicol (28.57%), Multi-drug resistance (26.22%), Efflux pump (23.46%), Aminoglycosides (16.79%), Trimethoprim (13.21%), Isoniazid (11.34%), Fluoroquinolone (6.21%) resistance genes, compared to PT soil. In addition, the abundance of the bacterial phyla Proteobacteria, Actinobacteria, Acidobacteria, and Gemmatimonadetes decreased considerably. The Mantel test indicated that long-term ZT practices substantially increased the abundance of beneficial microbial flora and inhibited the enrichment of ARGs in soil by improving soil microbial diversity, metabolic activity, increasing SOC, TN, and available Zn, and decreasing pH. Overall, long-term no-tillage practices inhibit the accumulation of antibiotic resistance genes in farmland soil, which is a promising agricultural management measure to reduce the accumulation risk of soil ARGs.

KEYWORDS

conservation tillage, antibiotic resistance genes, soil drug resistance, microbial metabolic activity, metagenomic sequencing

Applied Soil Ecology 191 (2023) 105060

Contents lists available at ScienceDirect

Applied Soil Ecology

journal homepage: www.elsevier.com/locate/apsoil

Conservation tillage and moderate nitrogen application changed the composition, assembly pattern and interaction network of abundant and rare microbial community on straw surface

Houping Zhang [a,b], Yuanpeng Zhu [c,d], Chaoyang Yu [a], Yuze Li [a], Mei Long [a], Wei Li [a], Yuncheng Liao [a], Weiyan Wang [a,b,*], Xiaoxia Wen [a,**]

[a] College of Agronomy, Northwest A&F University, Yangling, PR China
[b] Key Laboratory of Crop Physi-ecology and Tillage Science in Northwestern Loess Plateau, Ministry of Agriculture, Northwest A&F University, Yangling, PR China
[c] Key Laboratory of Water Cycle and Related Land Surface Processes, Institute of Geographic Sciences and Natural Resources Research, Chinese Academy of Sciences, Beijing 100101, PR China
[d] University of Chinese Academy of Sciences, Beijing 100049, PR China

ARTICLE INFO

Keywords:
Abundant biosphere
Assembly processes
Microbial community composition
Rare biosphere

ABSTRACT

Microbial-driven straw decomposition is important for soil organic carbon accumulation, nutrient uptake, and crop utilization. However, the mechanism by which tillage and fertilization interactions form the abundant and rare microbial communities that mediate straw degradation in dry farmland remains unclear. Based on an interaction experiment between three tillage practices (zero-till, chisel-till, and conventional plow-till) and three levels of nitrogen fertilizer (180, 240, and 300 kg·N·ha^{-1}), we aimed to understand the community assembly process of abundant and rare microbe in the decomposition of maize straw. We found that the abundant bacterial and fungal communities were governed by stochastic processes, whereas the rare bacterial communities were dominated by deterministic processes. Furthermore, the relative importance of deterministic assembly of all microbial communities was higher in conservation tillage; in addition, the deterministic assembly process of the abundant bacterial and fungal communities was significantly increased by the medium level of nitrogen fertilizer (240 kg·N·ha^{-1}), but the rare microbial community was not significantly affected. Redundancy analysis (RDA) and threshold indicator taxa analysis (TITAN) indicated that soil temperature, pH, and NO_3^- are the key influencing factors for the abundant and rare microbial communities. Overall, conservation tillage and a medium level of nitrogen fertilizer (240 kg·ha^{-1}) in dry farmland promoted straw decomposition by regulating the development and turnover of straw-decomposing communities, in which they regulated bacterial community succession rather than fungi within a short decomposition time. These findings highlight the distinct responses to conservation tillage and N fertilization in the community assembly of abundant and rare biospheres in maize straw decomposition, and provide additional evidence for the development of conservation tillage applications in drylands.

1. Introduction

Straw decomposition is an intricate process driven by microorganisms, and rare biospheres play a crucial role in microscale ecosystems. The critical role of rare biospheres in ecological processes has been extensively reported, mainly because of the low abundance and distribution of its species, its specific metabolic functions, and its role as a seed bank for biodiversity (Gendron et al., 2019; Yan et al., 2021; Jia et al., 2022). Moreover, several reports have highlighted that microorganisms regulate the rate and degree of straw decomposition in a rare biosphere which was defined by low relative abundance but obtained high number of species (Jia et al., 2018). In comparison to rare biosphere, abundant biosphere maintains the essential function of microbial community across ecological process. Besides, in residue decomposition, the stability of decomposers' community is partly decisioned by preponderant species (Deacon et al., 2006). There have been

* Correspondence to: W. Wang, College of Agronomy, Northwest A&F University, YangLing, Xianyang, Shaanxi 712100, PR China.
** Corresponding author.
E-mail addresses: wweiyan@nwsuaf.edu.cn (W. Wang), wenxx66@nwsuaf.edu.cn (X. Wen).

https://doi.org/10.1016/j.apsoil.2023.105060
Received 15 March 2023; Received in revised form 1 June 2023; Accepted 12 July 2023
Available online 25 July 2023

Combining conservation tillage with nitrogen fertilizer measures promotes maize straw decomposition by regulating microbial community and enzyme activities

Houping ZHANG[1,2], Xueqin TANG[1], Quanming HOU[1], Yuanpeng ZHU[3], Zhangheng REN[1], Huanxin XIE[1], Yuncheng LIAO[1], Weiyan WANG[1,2,*] and Xiaoxia WEN[1,*]

[1]*College of Agronomy, Northwest A&F University, Yangling 712100 (China)*
[2]*Key Laboratory of Crop Physi-ecology and Tillage Science in Northwestern Loess Plateau, Ministry of Agriculture, Northwest A&F University, Yangling, 712100 (China)*
[3]*Key Laboratory of Water Cycle and Related Land Surface Processes, Institute of Geographic Sciences and Natural Resources Research, Chinese Academy of Sciences, Beijing 100101 (China)*

(Received February 19, 2023; revised April 14, 2023; accepted April 17, 2023)

ABSTRACT

Straw return can effectively improve the farmland soil microenvironment and soil fertility. However, excessive straw in the topsoil adversely affects seed germination and crop growth. At present, the characteristics and key driving factors of straw decomposition in dry farmlands are unclear. Based on the interaction between three tillage practices (*i.e.*, zero-till (ZT) and chisel-till (CPT) *vs*. conventional plow-till (PT)) and three nitrogen fertilizer rates (*i.e.*, low nitrogen (N1: 180 kg N ha^{-1}) and high nitrogen (N3: 300 kg N ha^{-1}) *vs*. normal nitrogen (N2: 240 kg N ha^{-1})), quantitative polymerase chain reaction (qPCR) technology and an enzymatic detection kit were used to investigate the effects of key straw-decomposition enzyme activities and microbial abundance on straw decomposition during the growth period of winter wheat. Between 2018 and 2020, repeated in situ measurements of straw decomposition indicated that zero-till and chisel-till significantly increased winter wheat yield (ZT: 10.94%; CPT: 12.79%) and straw decomposition velocity (ZT: 20%; CPT: 26.67%), compared with plow-till. N2 (240 kg N ha^{-1}) significantly increased wheat yield (N1: 4.65%; N3: 5.31%) and straw decomposition velocity (N1: 26.33%; N3: 13.21%), compared to N1 (180 kg N ha^{-1}) and N3 (300 kg N ha^{-1}), respectively. The partial least squares pathway model showed significant positive direct effects of soil moisture, NO_3^-, NH_4^+, total nitrogen, bacteria, cellulase, laccase and xylanase activities on straw decomposition, while pH, fungi and Actinomycetes had significant negative direct effects on straw decomposition. Overall, conservation tillage (zero-till and chisel-till) combined with N2 (240 kg N ha^{-1}) is beneficial for straw decomposition in the drylands of the Loess Plateau and improve straw resource utilization and basic soil fertility. The results of the study clarify the key drivers of straw decomposition in dryland farmlands, and provide new ideas for developing updated soil management practices and adaptive nitrogen application strategies to promote the resource utilization of straw and achieve the goals of carbon peaking and carbon neutrality.

*Corresponding author. E-mail: wenxiaoxia6811@163.com, wweiyan@nwsuaf.edu.cn.

Received: 25 June 2022 | Revised: 27 March 2023 | Accepted: 2 April 2023
DOI: 10.1002/ldr.4708

RESEARCH ARTICLE

WILEY

Microbial functional genes within soil aggregates drive organic carbon mineralization under contrasting tillage practices

Weiyan Wang[1,2,3] | Houping Zhang[1] | Nangia Vinay[4] | Dong Wang[1] | Fei Mo[1,3] | Yuncheng Liao[1,2] | Xiaoxia Wen[1]

[1]College of Agronomy, Northwest A&F University, Yangling, Shaanxi, PR China

[2]Ministerial and Provincial Co-Innovation Centre for Endemic Crops Production with High-quality and Efficiency in Loess Plateau, Shanxi Agricultural University, Taiyuan, Shanxi, PR China

[3]Key Laboratory of Crop Physi-ecology and Tillage Science in Northwestern Loess Plateau, Ministry of Agriculture, Northwest A&F University, Yangling, Shaanxi, PR China

[4]International Center for Agricultural Research in the Dry Areas (ICARDA), Rabat, Morocco

Correspondence
Fei Mo and Wenxiao Wen, College of Agronomy, Northwest A&F University, Taicheng Rd 3, Yangling, Shaanxi 712100, PR China.
Email: mofei@nwafu.edu.cn and wenxx66@nwsuaf.edu.cn; wenxiaoxia6811@163.com

Funding information
Ministerial and Provincial Co-Innovation Centre for Endemic Crops Production with High-quality and Efficiency in Loess Plateau, Grant/Award Number: SBGJXTZXKF-08; Starting Research Fund from the Northwest A&F University, Grant/Award Number: 2452021112; National Natural Science Foundation of China, Grant/Award Numbers: 31971860, 31671643

Abstract

Soil organic carbon (SOC) transformation is susceptible to tillage practices. Conservation tillage is known to optimize soil structure, improve microbial community diversity and increase SOC storage. However, how soil aggregate distribution and microbial community structure and function within aggregates affect SOC transformation under long-term conservation tillage remains unclear. In this study, SOC mineralization dynamics were studied in situ and under laboratory conditions to examine the mechanisms by which C functional genes within soil aggregates of different sizes (i.e., mega-, macro-, and micro-aggregates) influence SOC mineralization under long-term tillage (i.e., zero, chisel, and plow tillage) in a dryland. The results indicated that in the winter wheat and summer maize rotation cropping system, SOC-derived CO_2-C emissions were 143.99 and 133.29 g CO_2-C m^{-2} h^{-1} lower under chisel and zero tillage than that under plow tillage, respectively. Moreover, after 180 days of laboratory incubation, SOC mineralization in micro- and macro-aggregates was 1.98 and 1.63 mg CO_2-C g^{-1} d^{-1} higher than that in mega-aggregates, respectively. The aggregate-associated differential modules of bacterial co-occurring networks may be directly governed by bacterial community diversity and composition, which might play critical roles in driving SOC mineralization in response to different tillage intensities. Moreover, aggregate-associated functional genes involved in labile and recalcitrant C compositions, which were determined by shotgun metagenomic sequencing, were associated with SOC mineralization and were significantly affected by the legacy effect of tillage intensity and aggregate size. Particularly, partial least squares path modeling revealed that genes involved in simple sugar metabolism exerted significantly positive effects on SOC mineralization, except for the effects of tillage intensity and aggregate size. Overall, this study showed that decreased abundances of labile C decomposition-related functional genes within aggregates and community composition changes, as elucidated by the differences in bacterial network modules, under conservation tillage inhibit SOC mineralization. These findings may help in the development of adaptive soil tillage strategies for reducing carbon emissions in agroecosystems.

KEYWORDS
aggregate microbial community, aggregate-associated SOC mineralization, conservation tillage, metagenomic sequencing, microbial C functional profiles

European Journal of Agronomy 141 (2022) 126619

Contents lists available at ScienceDirect

European Journal of Agronomy

journal homepage: www.elsevier.com/locate/eja

Reducing greenhouse gas emissions and improving net ecosystem economic benefit through long-term conservation tillage in a wheat-maize multiple cropping system in the Loess Plateau, China

Weiyan Wang [a,b,*], Houping Zhang [a], Fei Mo [a], Yuncheng Liao [a,b], Xiaoxia Wen [a,**]

[a] College of Agronomy, Northwest A&F University, Taicheng Road 3, Yangling, Shaanxi 712100, China
[b] Ministerial and Provincial Co-Innovation Centre for Endemic Crops Production with High-quality and Efficiency in Loess Plateau, Taigu 030801, China

ARTICLE INFO

Keywords:
Conservation tillage
GHG emissions
Soil organic carbon sequestration
Total nitrogen storage
Net ecosystem economic benefit

ABSTRACT

Reducing greenhouse gas emissions and loss of soil fertility, while ensuring stable yield, is crucial to achieving "Carbon Peak" and "Carbon Neutrality" in grain production but is different to achieve. In this study, we aimed to understand the effects of conservation tillage on the yield, GHG emissions, soil carbon and nitrogen sequestration, and net ecosystem economic benefit (NEEB) to promote the transformation of tillage methods in the Loess Plateau, China, based the continuous application (>11 yr) of conservation tillage. Four-year observations showed that zero tillage and chisel plough tillage obviously reduced N_2O and CO_2 emissions but greatly increased CH_4 uptake relative to plow tillage. Furthermore, the coupling relationship between CO_2 and N_2O fluxes was weakly antagonistic during the winter wheat growing season, whereas there was a strong synergistic coupling between these fluxes during the summer maize growing season. An antagonistic coupling relationship appeared between CH_4 and N_2O fluxes, whereas CO_2 and CH_4 fluxes appeared to be randomly related. Importantly, when carbon (C) emission reached 17.5 Mg C $ha^{-1}yr^{-1}$, and nitrogen (N) emission reached 7.8 kg N $ha^{-1}yr^{-1}$, the soil changed from a C sink to C source; when C emission reached 17.3 Mg C $ha^{-1}yr^{-1}$, and N emission reached 6.8 kg N $ha^{-1}yr^{-1}$, the soil changed from a N sink to N source. Considering yield gains, agricultural activity costs, and global warming potential costs together, chisel plough tillage significantly increased NEEB by 19.87%. Together, the advantages of long-term chisel plough tillage can reduce greenhouse gases emissions and increase NEEB while achieving soil carbon and nitrogen sequestration. Therefore, chisel plough tillage practice has both economic and environmental benefits.

1. Introduction

Global warming caused by the increase in anthropogenic greenhouse gas (GHG) emissions represents a major challenge for both the society and policymakers (Mora et al., 2018). Farmland soil has a great carbon-neutralization potential because of its dual role as carbon and nitrogen source and sink (IPCC, 2013, 2014). If all croplands are converted to reduced or zero tillage, 25 Gt equivalents of C may be sequestered over the next 50 years (Langholtz et al., 2021), making the choice of tillage crucial for stabilizing atmospheric CO_2, CH_4, and N_2O concentrations. Although researchers have studied GHGs emissions response to tillage intensity, little is known about the coupling relationship among the tillage-induced GHG emissions intensities in dryland agroecosystems. This gap in knowledge has hindered efforts to promote efficient management decisions and incorporate the interactions among GHG fluxes into Earth system models (Liang et al., 2015).

Agricultural soils are not only the main sources of carbon dioxide (CO_2), methane (CH_4), and nitrous oxide (N_2O) emissions but also sinks of carbon (C) and nitrogen (N) (Derpsch et al., 2014; Janssens et al., 2003; Lal, 2004a, 2015; Lipper et al., 2014; Powlson et al., 2014; Reay et al., 2012). Conservation tillage practices, such as reduced tillage and zero tillage, are widely considered effective agricultural management practices to improve soil fertility and reduce GHG emissions from farmland soils (IPCC, 2013; Lal, 2004a). However, reports of field-scale GHG emissions affected by conservation tillage are variable and contradictory (Zhang et al., 2015). The CO_2, CH_4, and N_2O emissions of

* Corresponding author at: College of Agronomy, Northwest A&F University, Taicheng Road 3, Yangling, Shaanxi 712100, China.
** Corresponding author.
E-mail addresses: wweiyan@nwsuaf.edu.cn (W. Wang), wenxx66@nwsuaf.edu.cn, wenxiaoxia6811@163.com (X. Wen).

https://doi.org/10.1016/j.eja.2022.126619
Received 18 July 2022; Received in revised form 16 August 2022; Accepted 29 August 2022
Available online 7 September 2022

Agriculture, Ecosystems and Environment 339 (2022) 108117

Contents lists available at ScienceDirect

Agriculture, Ecosystems and Environment

journal homepage: www.elsevier.com/locate/agee

Patterns of denitrifier communities assembly and co-occurrence network regulate N_2O emissions in soils with long-term contrasting tillage histories

Weiyan Wang [a,b,*], Houping Zhang [a], Xiang Lin [a], Dong Wang [a], Yuncheng Liao [a,c], Xiaoxia Wen [a,**]

[a] College of Agronomy, Northwest A&F University, Yangling, Xianyang, Shaanxi 712100, PR China
[b] Key Laboratory of Crop Physi-ecology and Tillage Science in Northwestern Loess Plateau, Ministry of Agriculture, Northwest A&F University, Yangling, Xianyang, Shaanxi 712100, PR China
[c] College of Agronomy, Shanxi Agricultural University, Taigu, Jinzhong 030800, PR China

ARTICLE INFO

Keywords:
Conservation tillage
Denitrifier communities
Co-occurrence patterns
Community assembly
Microbial diversity

ABSTRACT

Denitrification is reducing nitrate to nitrous oxide (N_2O) and nitrogen (N_2) under the action of denitrifying microorganisms, which are the main source of soil N_2O emissions. However, the co-occurrence pattern and community assembly process of denitrifier communities have not been studied in agricultural soils with long-term contrasting tillage histories. Based on a continuous (> 11 yr) conservation experiment, we aimed to understand the community assembly process and co-occurrence network of *nirK*-, *nirS*-, *nosZI*- and *nosZII*-type denitrifier communities under conservation tillage (i.e., zero tillage (ZT) and chisel plough tillage (CPT)) and conventional tillage (i.e., plow tillage (PT)). Continuous *in situ* measurements showed that long-term conservation tillage significantly decreased the denitrification potential and N_2O emission fluxes. CPT and ZT significantly increased the taxonomic and phylogenetic diversity of *nirK*, *nosZI,* and *nosZII* type communities, whereas consistently decreased the diversity of *nirS*-type communities, compared with PT. Although the assembly of *nirK*, *nirS*, *nosZI,* and *nosZII* type denitrifier communities were dominated by stochastic processes, the relative importance of stochastic assembly of denitrifying microbial communities was higher in conservation tillage soil. The co-occurrence network analyses further revealed clear tillage-induced ecological functions of N_2O emissions, as evidenced by lower key nodes abundance and robustness of *nirS* and *nirK* communities network and higher key nodes abundance and robustness of *nosZI* and *nosZII* communities in conservation tillage soils. Variation partitioning analysis further indicated that the assembly processes significantly changed soil N_2O emission intensity by regulating α-diversity and the key species abundances in the co-occurrence network of denitrifying communities. Overall, conservation tillage practices increased the diversity and the key nodes abundance of *nosZI*- and *nosZII*-type communities and decreased the diversity and the key nodes abundance of *nirS*- and *nirK*-type communities by regulating the relative importance of the stochastic assembly process of denitrifier communities, which is eventually likely to curb N_2O emissions by strengthening the capacity of the N_2O sink and weakening the capacity of the N_2O source. These findings provide new insights into the formation of dryland microbial communities in agricultural soils with long-term contrasting tillage histories. Especially considering future climate change, this knowledge would prove useful in improving agroecosystem productivity and curbing greenhouse gas emissions.

1. Introduction

Denitrification is the key process of the soil nitrogen cycle, which reduces nitrate (NO_3^-) to nitrous oxide (N_2O) and nitrogen (N_2) under the driving of denitrifying microorganisms (Petersen et al., 2012). Nitrite reductase and N_2O reductase encoded by *nirS/nirK* and *nosZ* genes are rate-limiting enzymes in the denitrification process, which play a very important role in soil N_2O emission (Butterbach-Bahl et al., 2013; Philippot, 2002). The reduction of nitrite to nitric oxide catalyzed by nitrite reductase is the first step that produces gaseous nitrogen in the

* Corresponding author at: College of Agronomy, Northwest A&F University, Yangling, Xianyang, Shaanxi 712100, PR China.
** Corresponding author.
E-mail addresses: wweiyan@nwsuaf.edu.cn (W. Wang), wenxiaoxia6811@163.com, wenxx66@nwsuaf.edu.cn (X. Wen).

https://doi.org/10.1016/j.agee.2022.108117
Received 13 April 2022; Received in revised form 11 July 2022; Accepted 26 July 2022
Available online 1 August 2022

Soil Biology and Biochemistry 157 (2021) 108239

Contents lists available at ScienceDirect

Soil Biology and Biochemistry

journal homepage: http://www.elsevier.com/locate/soilbio

Continuous application of conservation tillage affects *in situ* N_2O emissions and nitrogen cycling gene abundances following nitrogen fertilization

Weiyan Wang [a,b], Yuting Hou [a], Wenhui Pan [a], Nangia Vinay [c], Fei Mo [a,b,**], Yuncheng Liao [a], Xiaoxia Wen [a,*]

[a] College of Agronomy, Northwest A&F University, Taicheng Road 3, Yangling, Shaanxi, 712100, PR China
[b] Key Laboratory of Crop Physi-ecology and Tillage Science in Northwestern Loess Plateau, Ministry of Agriculture, Northwest A&F University, Yangling, Shaanxi, 712100, PR China
[c] International Center for Agricultural Research in the Dry Areas (ICARDA), P.O. Box 6299-10112, Rabat, Morocco

ARTICLE INFO

Keywords:
Denitrification
Nitrification
nosZI:nosZII
Metagenomic sequencing
N_2O emission
Long-term field experiment

ABSTRACT

Fertilized agricultural soils can be a major source of soil nitrous oxide (N_2O) emissions to the atmosphere. Conservative soil management may have the ability to reduce N_2O emissions through affecting a number of N-cycling-related soil biophysical properties. Using *in situ* N_2O measurements combined with the techniques of quantitative polymerase chain reaction (qPCR), amplicon sequencing, and metagenomic sequencing, we aimed to understand the effects of long-term (>10 y) conservation tillage (i.e., zero- and chisel-till *vs.* conventional plow-till) on soil N_2O production and associated microbial guilds following inorganic N fertilizer application in maize. Between 2017 and 2019, continuous *in situ* measurements of N_2O fluxes indicated that both zero- and chisel-till significantly lowered cumulative emissions within the growing season, compared to plow-till, mainly through shortening the duration and reducing the magnitude of post-fertilization emission events. Conservative soil management, in particular zero-till, consistently increased the Shannon diversity index of bacterial community over the growing season, compared with plow-till. High-frequency qPCR analyses further revealed a clear tillage-induced niche differentiation between *nosZI*- and *nosZII*-N_2O reducers, as evidenced by the dominant gene abundance of *nosZII* compared to *nosZI* in the conservation tillage soil, which eventually probably contributed to the transformation of N_2O to N_2. Moreover, compared to plow-till, zero-till significantly decreased gene abundances involved in N_2O production including the *nirS*, *nirK*, and *narG* genes, but increased abundances of N_2O reduction genes such as *nosZ* during peak N_2O emissions. Critically, the abundances of detected species involved in denitrification, such as *Deltaproteobacteria_bacterium* spp. and *Alphaproteobacteria_bacterium* spp. were clearly inhibited by zero-till. Overall, the reduced soil N_2O emissions under reduced tillage positively and strongly depended on the *nosZI*-to-*nosZII* ratio, while increased emissions due to conventional tillage were positively associated with intensified denitrification. Such improvements in understanding of the responses of N-cycling gene abundances to tillage intensity can certainly help in the development of updated soil management practices and adaptative N application strategies to reduce reactive N emissions in agricultural ecosystems.

1. Introduction

The application of synthetic nitrogen (N) fertilizers to agricultural soils has contributed substantially to the enhancement of food production and hence alleviation of hunger worldwide (Chen et al., 2018; Forster et al., 2007). However, the resulting anthropogenic N imbalance has engendered a series of environmental consequences, particularly nitrous oxide (N_2O) emissions to the atmosphere. Some recommended soil management practices have demonstrated efficacy toward reducing N_2O emissions. For example, long-term reduced or zero tillage offers the potential to increase soil N retention by improving soil health scores and reducing direct gaseous N release in certain cases (Rochette, 2008). The dominant sources of soil N_2O production, which contribute more than 70% of total emissions, are closely related to belowground microbial processes (Syakila and Kroeze, 2011; Braker and Conrad, 2011). However, how different long-term tillage intensities affect *in situ* N_2O

* Corresponding author.
** Corresponding author. College of Agronomy, Northwest A&F University, Taicheng Road 3, Yangling, Shaanxi, 712100, PR China.
E-mail addresses: mofei@nwafu.edu.cn (F. Mo), wenxiaoxia6811@163.com, wen_xx@nwsuaf.edu.cn (X. Wen).

https://doi.org/10.1016/j.soilbio.2021.108239
Received 7 November 2020; Received in revised form 23 March 2021; Accepted 24 March 2021
Available online 30 March 2021

Journal of Cleaner Production 274 (2020) 122854

Contents lists available at ScienceDirect

Journal of Cleaner Production

journal homepage: www.elsevier.com/locate/jclepro

Conservation tillage enhances crop productivity and decreases soil nitrogen losses in a rainfed agroecosystem of the Loess Plateau, China

Weiyan Wang [a], Jinchuan Yuan [a], Siman Gao [a], Tong Li [a], Yajun Li [a], Nangia Vinay [b], Fei Mo [a, **], Yuncheng Liao [a], Xiaoxia Wen [a, *]

[a] College of Agronomy, Northwest A&F University, Taicheng Road 3, Yangling, Shaanxi, 712100, PR China
[b] International Center for Agricultural Research in the Dry Areas (ICARDA), P.O. Box 6299-10112, Rabat, Morocco

ARTICLE INFO

Article history:
Received 17 September 2019
Received in revised form
6 June 2020
Accepted 14 June 2020
Available online 17 July 2020

Handling editor: Prof. Jiri Jaromir Klemeš

Keywords:
Nitrogen balance
N_2O
NH_3
N loss
Cleaner production
Conservation tillage

ABSTRACT

Conservation tillage has been recommended as one of the effective soil management practices for mitigating the negative environmental effects of synthetic ammonia application and hence achieving cleaner agricultural production. However, information about how long-term conservation tillage affects agroecosystem nitrogen balance in dryland winter wheat-summer maize cropping is limited. Based on a long-term (>9 yr) field tillage experiment and *in-situ* observation, we assessed the effects of different tillage practices (i.e., chisel plough tillage (CPT), zero tillage (ZT), and conventional ploughing tillage (PT)) on soil nitrogen balance and crop productivity in the 2016–2017 and 2017–2018 growing seasons. Each tillage practice was exposed to a local widely adopted N application rate (240 kg ha^{-1} yr^{-1}) in both seasons. Our results indicated that, compared with PT, CPT and ZT significantly ($P < 0.05$) reduced N_2O emissions by 39.7% (2.8 kg N ha^{-1} yr^{-1}) and 55.3% (3.9 kg N ha^{-1} yr^{-1}), and N leaching by 52.3% (11.8 kg N ha^{-1} yr^{-1}) and 147.7% (33.3 kg N ha^{-1} yr^{-1}) across the two growing seasons, respectively. CPT significantly enhanced crop aboveground N uptake by 4.0%, and increased the annual crop yield by 5.9–8.1% (0.8–1.2 t ha^{-1} yr^{-1}). Although CPT and ZT enhanced NH_3 volatilization by 46.7% (14.6 kg N ha^{-1} yr^{-1}) and 84.3% (26.3 kg N ha^{-1} yr^{-1}), the total N losses under CPT and ZT were decreased on an average by 7.4% and 22.4%, respectively. Overall, CPT and ZT significantly increased the accumulation of soil total nitrogen in the 0–100 cm layer by 34.8 and 54.1 kg N ha^{-1} yr^{-1}, respectively. Taking N inputs and outputs together, CPT achieved a lower N surplus mainly due to increased crop N harvest and reduced N losses including gaseous emissions and hydrological leaching. Our findings suggest that long-term chisel plough tillage in dryland agroecosystems could serve as a promising soil management practice in increasing crop productivity and maintaining sustainability through enhancing N removal from crop biomass and decreasing N losses via N_2O emission and nitrate-N leaching.

1. Introduction

Over the last several decades, synthetic nitrogen (N) fertilizer use has greatly contributed to the enhancement of food production and hence alleviation of hunger in China (Chen et al., 2018; Xia et al., 2017). However, decades of N fertilizer overuse, especially in dryland agriculture systems, have resulted in serious environmental damages, mainly through disturbing the balance of N cycling of agroecosystems (Sainju et al., 2012; Tilman, 2001; Zhang et al., 2019). Drylands account for more than 70% of the total arable area in China and thus play a key role in ensuring national food security (Li, 2004). In order to meet the demand of more food for an ever-growing population, more sustainable dryland farming practices should be implemented in the future. Conservation tillage, as one of the sustainable soil management techniques, has been increasingly promoted in dryland crop production systems of China (Jin et al., 2007). Through minimum mechanical disturbance of the soil, conservation tillage can be expected to improve soil structure and nutrient conditions (Arshad et al., 1999). However, after decades of conservation tillage application, its impacts on the crop productivity and N balance in agroecosystem remains uncertain (Miao et al., 2011; Van den Putte et al., 2010).

* Corresponding author.
** Corresponding author.
E-mail addresses: mofei@nwafu.edu.cn (F. Mo), wen_xx@nwsuaf.edu.cn (X. Wen).

https://doi.org/10.1016/j.jclepro.2020.122854
0959-6526/

Soil & Tillage Research 194 (2019) 104347

Contents lists available at ScienceDirect

Soil & Tillage Research

journal homepage: www.elsevier.com/locate/still

Conservation tillage reduces nitrous oxide emissions by regulating functional genes for ammonia oxidation and denitrification in a winter wheat ecosystem

Weiyan Wang, Miao Yang, Pengfei Shen, Ruoyu Zhang, Xiaoliang Qin, Juan Han, Yajun Li*, Xiaoxia Wen*, Yuncheng Liao

College of Agronomy, Northwest A&F University, Yangling, Shaanxi, 712100, China

ARTICLE INFO

Keywords:
Nitrous oxide
Conservation tillage
Ammonia oxidation
Denitrification

ABSTRACT

Conservation tillage is considered a promising strategy for the reduction of farmland nitrous oxide (N_2O) emissions. Soil microbial ammonia oxidation and denitrification are key factors in N_2O emissions. However, studies on the effects of tillage practices on soil ammonia oxidation and denitrification by microbes are scarce. This study was based on a 7-year fixed-site field experiment on different tillage practices, including conservation [chisel plough tillage (CPT) and zero tillage (ZT)] and conventional tillage [ploughing tillage (PT)]. Compared with PT, CPT and ZT significantly reduced cumulative soil N_2O emissions by 45.82% and 73.58%, respectively. The abundance of functional genes in soil microbes was quantified by real-time PCR, revealing that the *archaea amoA*, *nirK*, and *nirS* genes were less abundant in conservation tillage than in conventional tillage soils, while *nosZ* gene abundance was greater in conservation tillage than in conventional tillage soils. A significant positive correlation was found between N_2O emission flux and *archaea amoA*, *nirS*, and *nosZ* gene copy number under agricultural soil conditions for ammonia oxidation and denitrification. This finding will improve the methods used for mitigating N_2O emissions from agricultural soil.

1. Introduction

Agricultural production, which has increased to meet the food requirements of the world population, has become a significant source of greenhouse gas emissions. With increased nitrogen (N) fertilizer application, nitrous oxide (N_2O) released from agricultural soil, especially related to dryland farming, has become an important anthropogenic greenhouse gas (Reay et al., 2012). Studies have shown that 70% of the N_2O produced in soil is due to agricultural activities such as fertilization and soil disturbance. (Syakila et al., 2011).

Microbial ammonia oxidation and denitrification in agricultural soils contribute the vast majority of N_2O emissions (Braker et al., 2011; Loescher et al., 2012). Ammonia oxidation is the first step in nitrification (Hink et al., 2016; Jin et al., 2014). In this process, N_2O is chiefly generated by ammonia-oxidizing bacteria (AOB) and archaea (AOA), which are involved in ammonia monooxygenase enzymatic oxidation of ammonium (NH_4^+) to hydroxylamine (NH_2OH) (Baggs et al., 2010; Conrad et al., 1996; Shaw et al., 2006). Studies on AOB and AOA revealed that they have the ability to oxidize NH_4^+ and produce N_2O (Loescher et al., 2012; Theodorakopoulos et al., 2017). Hink et al. (2016) showed that AOA- and AOB-driven ammonia oxidation strongly correlated with nitrification rate and N_2O emission. Lin et al. (2017) demonstrated in an incubation experiment that biochar addition increased N_2O emissions by enhancing the diversity of AOA and AOB.

The denitrification process includes a series of reactions that reduces nitrate (NO_3^-) to nitrogen gas (N_2) using N_2O as an important intermediate (Rosch et al., 2002). In complete denitrification, NO_3- is first reduced to N_2O and then to N_2. When the conversion of N_2O to N_2 is impaired, N_2O is generated (Harter et al., 2014; Liu et al., 2014; Stein et al., 2017). Nitrate reductase, which is the key enzyme for NO_3^- reduction to N_2O, is the major contributor for N_2O production during denitrification (Braker et al., 2011). The functional genes *nirK* and *nirS* encode nitrate reductases. Studies on different types of soil revealed that higher abundance of *nirK* and *nirS* were associated with increased N_2O emissions (Li et al., 2016; Szukics et al., 2009; Yang et al., 2017). The reduction of N_2O to N_2 is catalysed by nitrous oxide reductase, which is encoded by *nosZ* (Schulz et al., 2017). The lack or inhibition of *nosZ* may result in incomplete denitrification (Stein et al., 2017; Zhang et al., 2017), and the regulation of *nosZ* level is considered an effective approach for N_2O reduction by controlling the released N_2O/N_2 ratio

* Corresponding authors. Present address: College of Agronomy, Northwest A&F University, Taicheng Road 3, Yangling, Shaanxi, 712100, China.
E-mail addresses: yajun3725@126.com (Y. Li), wenxiaoxia6811@163.com (X. Wen).

https://doi.org/10.1016/j.still.2019.104347
Received 29 April 2018; Received in revised form 16 July 2019; Accepted 23 July 2019
Available online 30 July 2019

(19)中华人民共和国国家知识产权局

(12)实用新型专利

(10)授权公告号 CN 209563175 U
(45)授权公告日 2019.11.01

(21)申请号 201920165482.4

(22)申请日 2019.01.30

(73)专利权人 西北农林科技大学
地址 712100 陕西省咸阳市杨凌区邰城路3号

(72)发明人 廖允成 温晓霞 王威雁 吴伟 刘杨 秦晓梁

(74)专利代理机构 武汉宇晨专利事务所 42001
代理人 王敏锋

(51)Int.Cl.
A01C 5/06(2006.01)
A01G 13/02(2006.01)

权利要求书1页 说明书3页 附图1页

(54)实用新型名称

一种新型小麦起垄覆膜机

(57)摘要

本实用新型涉及一种新型小麦起垄覆膜机，包括机架，所述机架两侧位置安装有固定拉杆，两个所述固定拉杆的下端向机架中部下方延伸，两个所述固定拉杆上通过销轴连接有行走轮，所述机架下方沿长度方向依次设有起垄总成、膜架、镇压轮和刮土板，所述起垄总成数量设置有两套，分别对称设置在机架下方位置，两个所述起垄总成上端连接有用以调节起垄总成高度的高度调节器，本实用新型结构简单、设计合理，能够适用于小麦田地的起垄覆膜作业，节省了劳动力，提高了工作效率，具有结构紧凑、性能可靠、操作方便、保养便捷的优点。

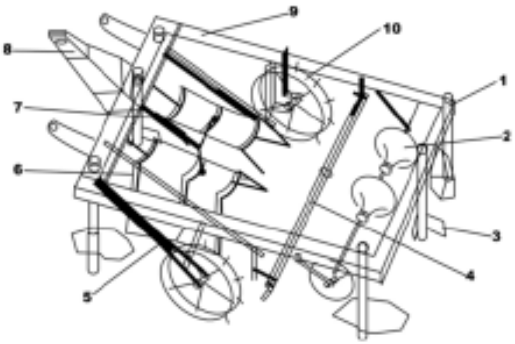

CN 209563175 U

(19)国家知识产权局

(12)发明专利申请

(10)申请公布号 CN 115517329 A
(43)申请公布日 2022.12.27

(21)申请号 202211180678.3

(22)申请日 2022.09.27

(71)申请人 西北农林科技大学
地址 712199 陕西省咸阳市杨凌示范区邰城路3号

(72)发明人 王东 王鑫悦 林祥 王威雁

(74)专利代理机构 北京高沃律师事务所 11569
专利代理师 薛红凡

(51)Int.Cl.
A23L 7/10(2016.01)
A23L 29/00(2016.01)
A23L 29/30(2016.01)

权利要求书2页 说明书12页 附图1页

(54)发明名称

一种凉皮粉及其制备方法

(57)摘要

本发明属于食品技术领域，具体涉及凉皮粉及其制备方法。本发明提供凉皮粉，所述凉皮粉包括第一凉皮粉、第二凉皮粉和第三凉皮粉；所述第一凉皮粉以筋力偏弱的中筋冬小麦的籽粒为原料制备得到；所述第二凉皮粉以筋力偏强的中筋冬小麦的籽粒为原料制备得到；所述第三凉皮粉以强筋冬小麦的籽粒为原料制备得到；本发明利用不同筋力冬小麦籽粒中所含直链淀粉、支链淀粉淀粉类型及其含量和比例的差异，获得不同硬度和弹性的凉皮粉从而制备满足不同人群口感的需求、性质稳定和口感良好的凉皮产品。

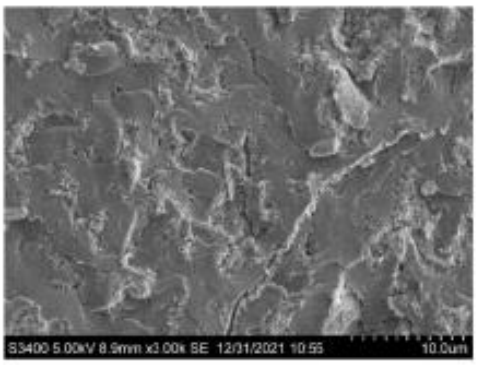

CN 115517329 A

《中国农业科学》

地址：北京市海淀区中关村南大街12号
电话 +86-10-82109808　82106281　82106282　82106283
http://www.ChinaAgriSci.com

聘　书

王威雁 博士：

兹聘请您为《中国农业科学》青年编委会委员，任期自2023年7月1日至2026年6月30日。

此聘

主编：

《中国农业科学》
2023年6月